ROHS Compliant

Date	2011/10/06
Revision	A

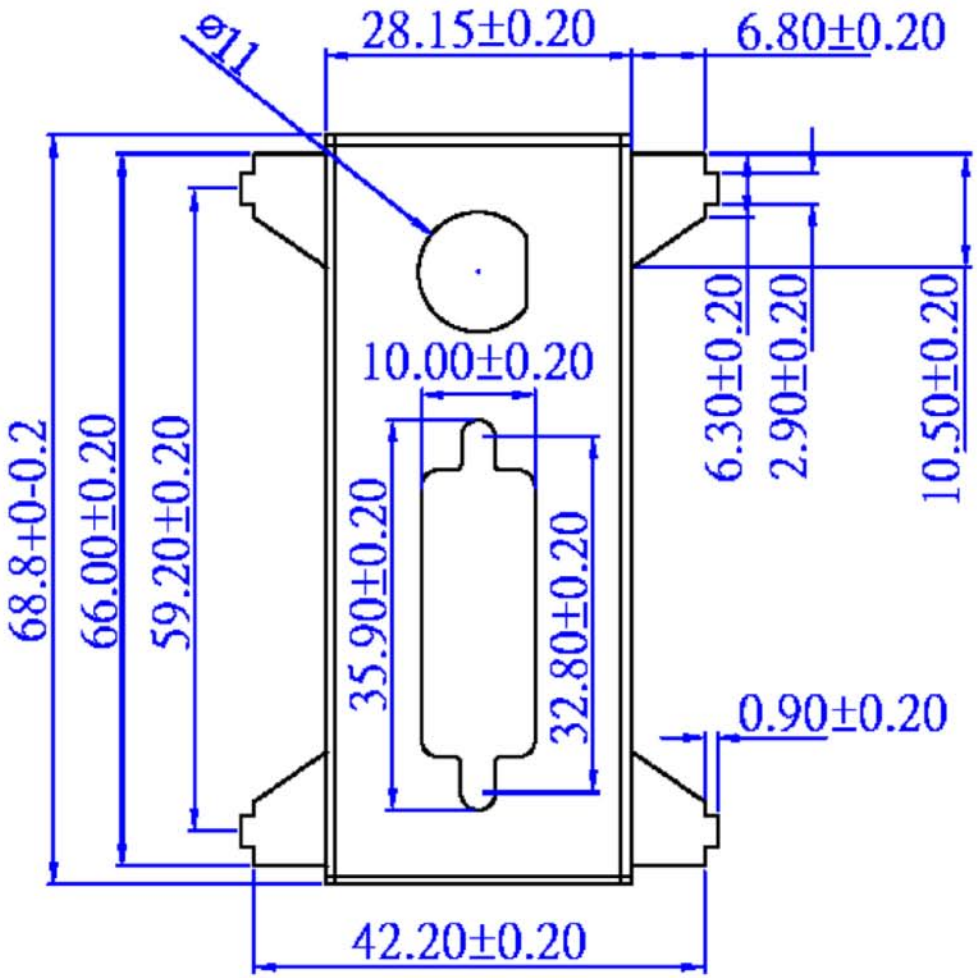

TECHNICAL DATA	
THICKNESS	0.8T
MATERIAL	台灣中鋼公司 G3141 SPCC（0.8T）鐵板
COLOR	WHITE

P/NO. VTK - DVI - 35A

ITEM. VTK - DVI - 35A	CO. SH5468	FILE.
DR. wakka 2011/10/05	APPD.	CHKD.
		SCALE /
		UNIT mm / SIZE A4
		SHEET / REV.