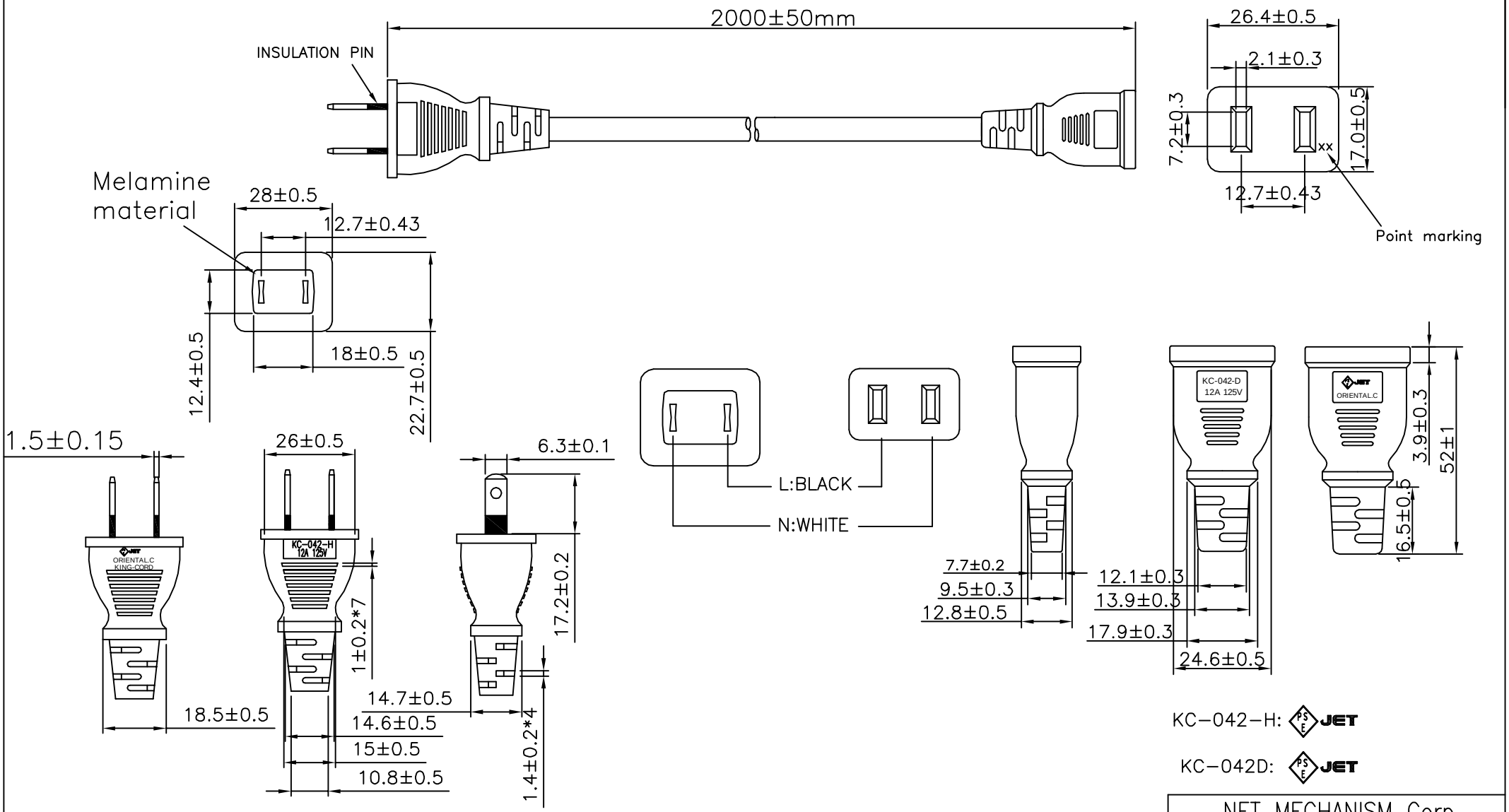

1.CABLE:VCTFK 2*1.25mm^2 JACKET BLACK OD=ø4.7*7.4±0.1mm

2.PVC:88 A PVC BLACK

3. COLOR:BLACK

4.Tie:BLACK

NET MECHANISM Corp www.cabling-ol.net			
SCALE	NONE	REV	B
UNIT	MM		
SHEET	1/1	DWG NO.K4H4D1QG200BR-B	
DATE	17/09/01		
TITLE			
PART NO: ACJ-2TP2S-12A-02			