REVISIONS		
ISS	SYMBOL	DESCRIPTION\DATE
A1		由BJ-8882-88BNTG001-R型號轉來\12/03/07'

REMARK: RoHS COMPLIANT
(符合 RoHS)

FOR CUSTOMER

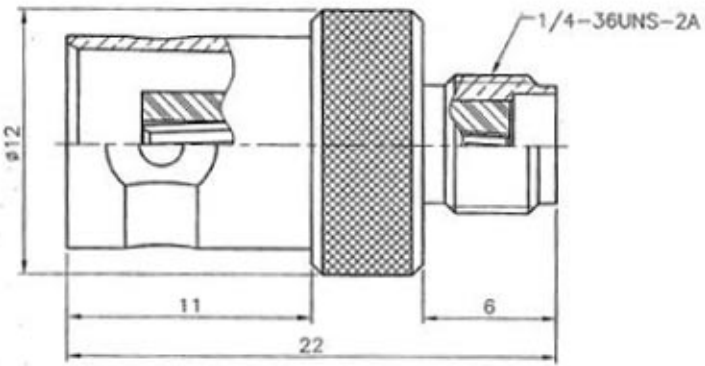

NOTES: FINISH (PLATING THICKNESS IN MICRO-INCHES)
1. BRASS PER QQ-B-626
2. NICKEL PL 70 MIN THICK OVER COPPER STRIKE
3. GOLD PL 3 MIN OVER NICKEL PL 70 MIN THICK OVER COPPER STRIKE
4. TEFLON MIL-P-19468
5. BERYLLIUM COPPER PER QQ-C-530

NO.	DESCRIPTION	MATERIAL	FINISH	Q'TY	DRAWING NO.
	CONTACT PIN	NOTE 5	NOTE 3		
	INSULATOR	NOTE 4	WHITE		
	BODY	NOTE 1	NOTE 2		

DIMENSIONS ARE IN MILLIMETERS

UNLESS OTHERWISE SPECIFIED TOLERANCES
(一般公差)
0.5~6 = ±0.2
>6~30 = ±0.4
>30~120 = ±0.6
>120~315 = ±1
>315~1000 = ±1.6
ANGLES(角度) = ±5'

SCALE	4/1	ISSUE	A1

PART NO.

APPROVED — DATE 12/03/07'

CHECKED — DATE 12/03/07'

DRAWN — DATE 12/03/07'

BNC JACK TO SMA JACK ADAPTOR

DRAWING NO. 70J78JNS5BF000B

FILE NO. Z:\NND\70J\78J\NS5\000\70J78JNS5BF000B-A1