RevNo	Revision note	Rev-By	RevDate	Signature	Checked

ITEM NO: FSDC-105-3 (COUPLER RAL7035)

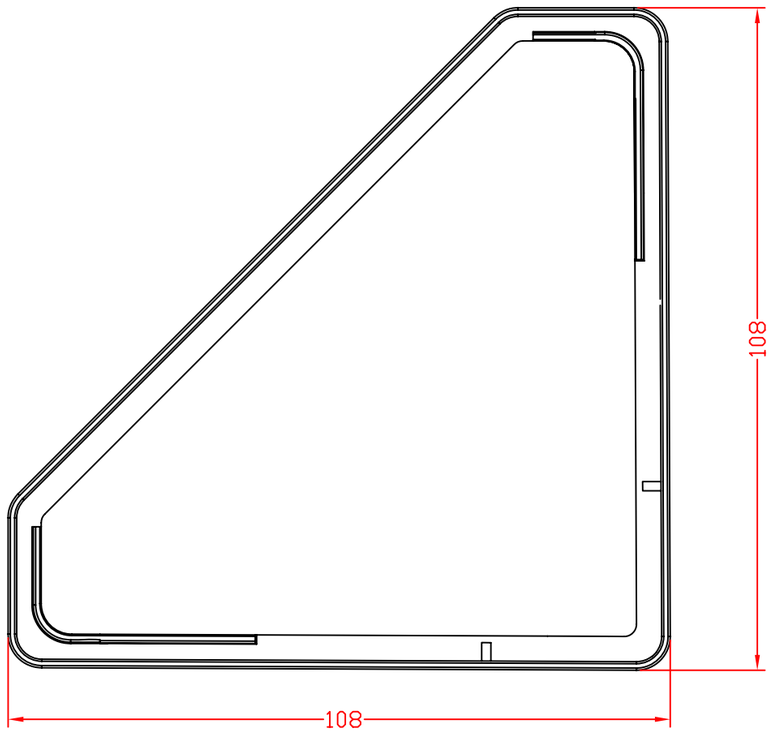

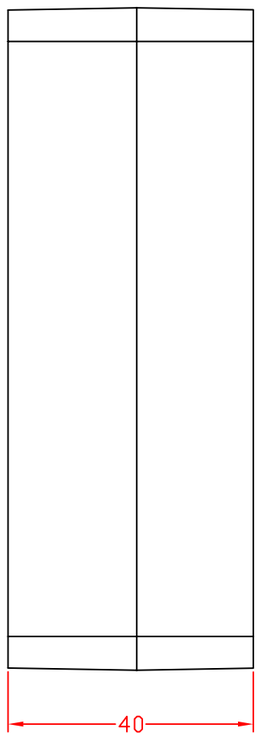

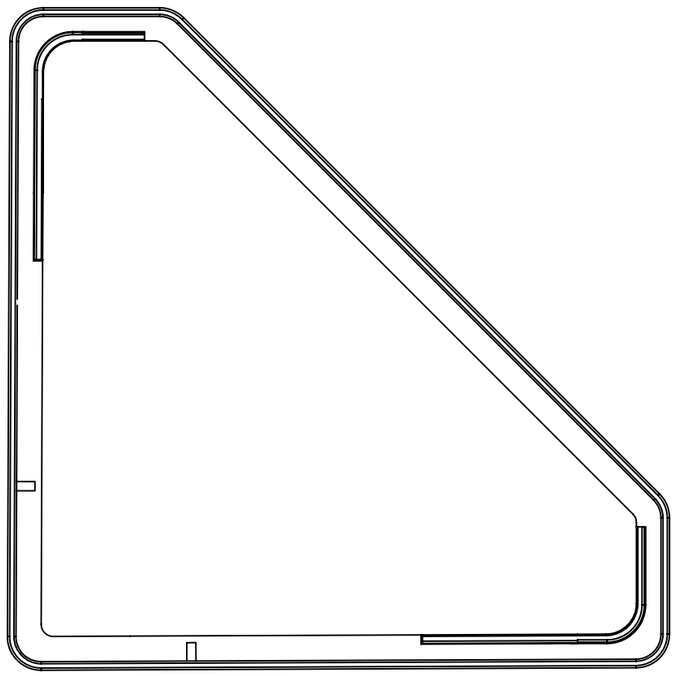

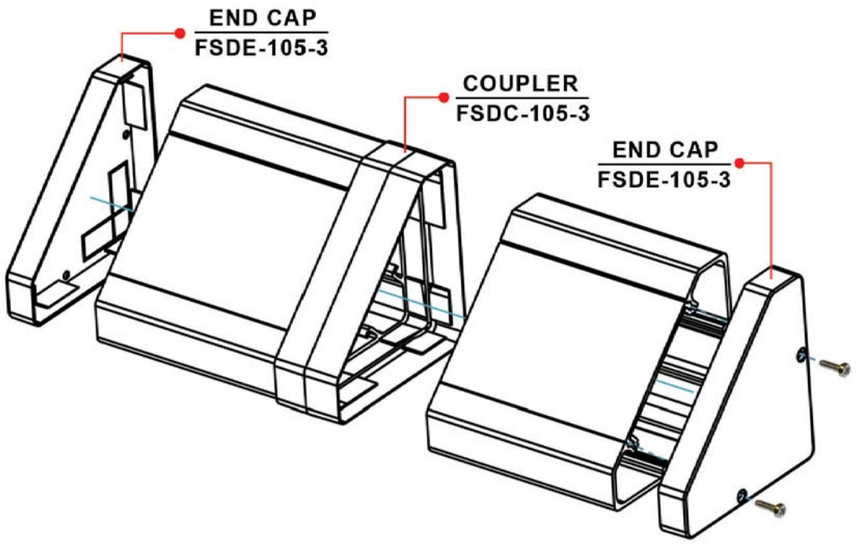

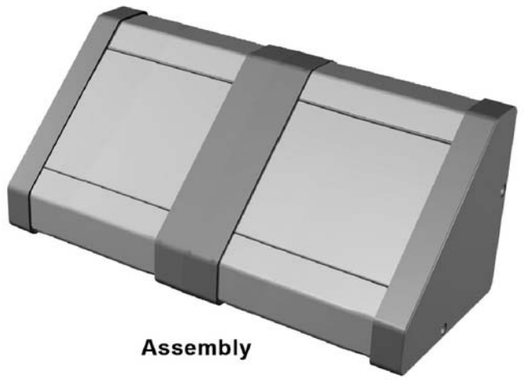

Assembly

Material : ABS

Color : RAL7035

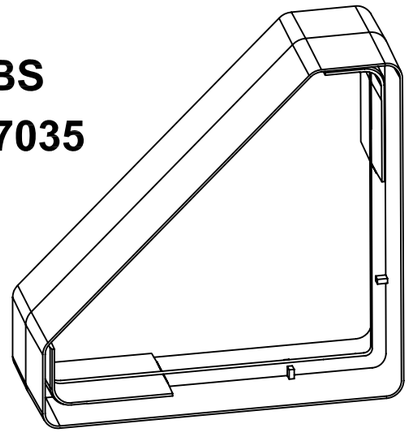

ITEM NO.	FSDC-105-3 (COUPLER RAL7035)			
CUSTOMER NO.				
DESIGNED BY ALEX	DATE	130319	UNIT	MM
	SCALE	1:1	VER.	1
NO.	Checked by			
APPR:	Approved by -date			