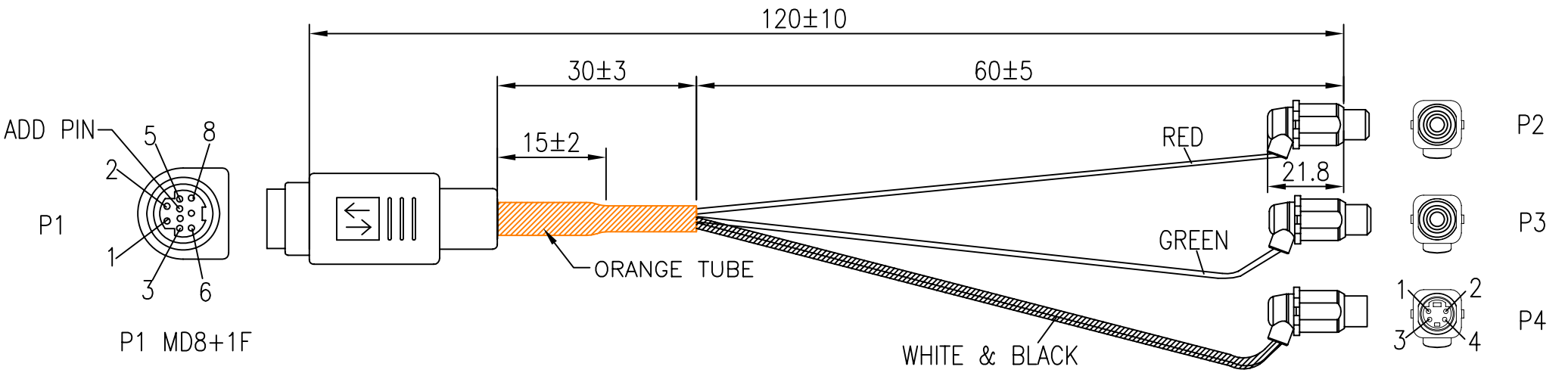

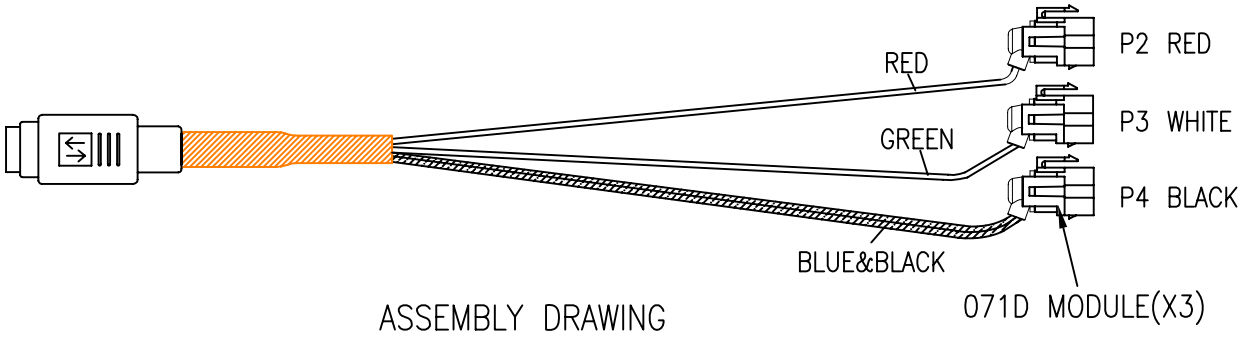

ASSEMBLY DRAWING

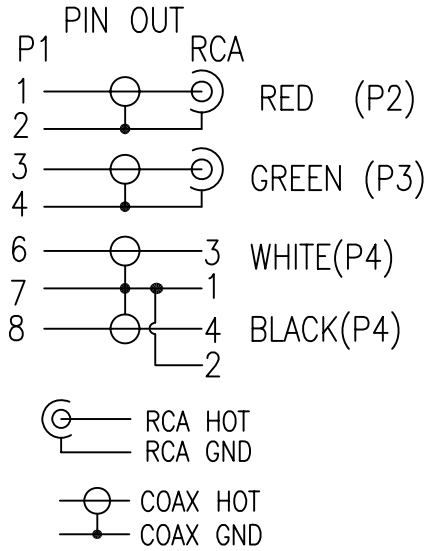

NOTES:

1. CABLE: UL20276 UL1354(30AWG+S)*5COAX(OFC)+PAPER JACKET
   PVC BLACK OD:7.0±0.15mm
2. CONN.: P1: MINI DIN 8+1PIN FEMALE: SOLDER TYPE, GOLD FLASH
   CONTACTS,BLACK INSULATION, NICKEL PLATED. SHELL.
   P2&P3:RCA FEMALE: NICKEL PLATED CONTACTS AND SHELL,SOLDER TYPE.
   P4: MD4 FEMALE: NICKEL PLATED CONTACTS AND SHELL,BLACK INSULATION.
3. ALL HOOD:P1 MOLDED 45P BLACK PVC;P2~P4 MOLDED 25P WHITE(WH05) PVC.
4. MODULE:071D MATERIAL:PC,COLOR:RED&WHITE&BLACK.
5. TESTING: 100% ELECTRICAL TEST.
6. MOLD NO.: MD6F-N01, MD6F-01; RCA-N06,RCA-06.

NET MECHANISM Corp www.cabling-ol.net			
SCALE	NONE	REV	A
UNIT	MM		
SHEET	1/1	DWG NO.	
DATE	06/16/11		
TITLE	MD8+1F TO 2RCA/F+MD4F		
PART NO.	SICC-MD4F-2RCAF-120		